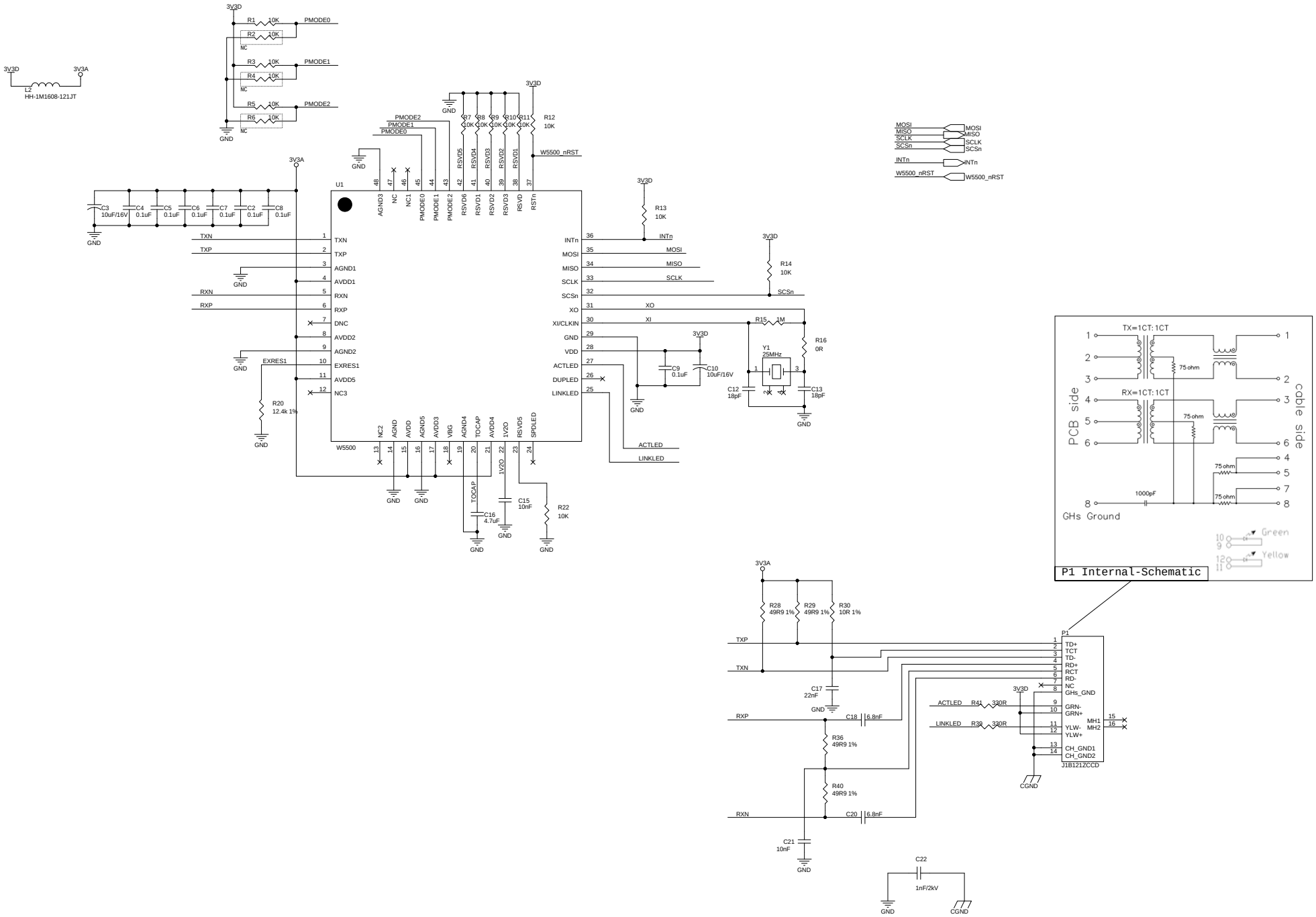

Title	W5500_REF_RJ45withMag	
Size C	Document Number <Doc>	Rev
Date: Wednesday, January 08, 2014	Sheet 1 of 1	